THIS DRAWING IS UNPUBLISHED. RELEASED FOR PUBLICATION -,- .
© COPYRIGHT - BY TYCO ELECTRONICS CORPORATION. ALL RIGHTS RESERVED.

PART NUMBER	REV	FIRST USED
1385896-1	B	122500-1
1385896-2	B	565435-5
1385896-3	B	354500-1
7-1385896-7	B	-

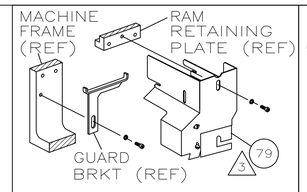

AMP-O-LECTRIC TM TERM GUARD

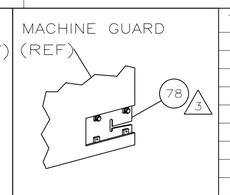

G TERMINATOR GUARD

TERMINAL NAME: .070 SERIES RECEPTACLE

PIN	SOCKET
173645	173631
175191	345208
345212	345261-1
345263	
776129-6	
776129-2	

REF SETTING	AMP TERMINAL CRIMP HEIGHT	AMP CRIMP SPECS WIRE SIZE
C-0	1.52 ±0.05mm [.060 ±.002]	1.25mm²
D-1	1.37 ±0.05mm [.054 ±.002]	0.85mm²
E-0	1.25 ±0.05mm [.049 ±.002]	0.5mm²
-	NOT	USED

CRIMP	SIZE	TYPE	RANGE
WIRE	2.29mm [.090]	F	0.5-1.25mm²
INSUL	2.6mm [.100]	F	Ø2.0-2.6mm

WIRE STRIP LENGTH	TERM APPL SPEC	FEED	APPL INSTRUCTION	SET UP GAGE	LAYOUT
4.9-5.5mm	114-5091	11.9mm[.468]	408-8040	458637-1	11382

LOC	DIST
A	66

REVISIONS

P	LTR	DESCRIPTION	DATE	DWN	APVD
	B1	ECR-08-009562	4-2008	MY	TE

-1	LEADMAKER	MECH POST FEED
-2	BENCH MODEL K	MECH PRE FEED
-3	BENCH MODEL G	MECH PRE FEED
-77	SPARE PARTS KIT	

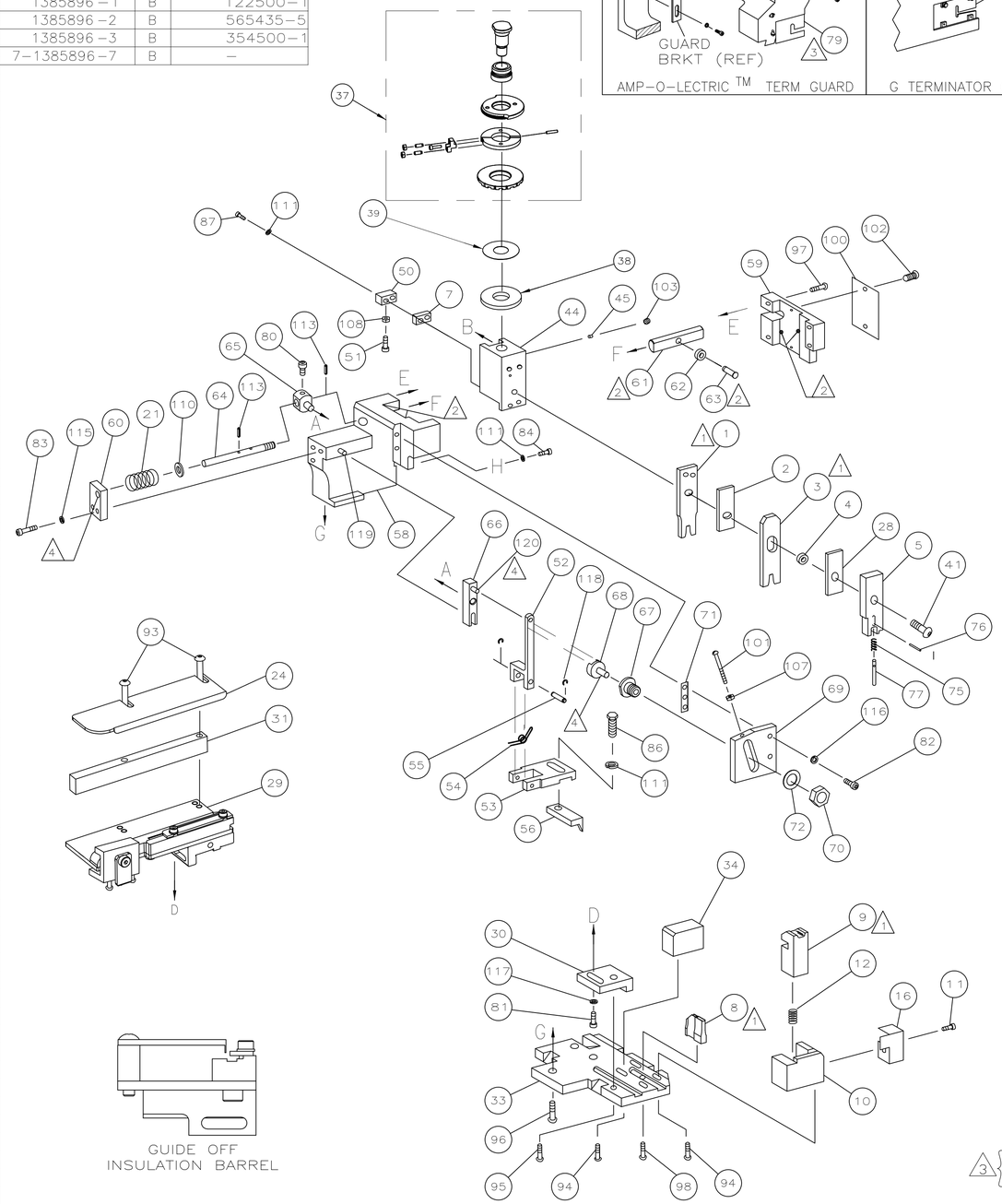

GUIDE OFF INSULATION BARREL

							129
							128
							127
							126
							125
-	1	1	1	-	217238-1	GENERAL INSTRUCTION PACKAGE	124
-	1	1	1	-	4088040	SF APPL INST 408-8040	123
							122
							121
-	REF	REF	REF	-	1-21030-1	PIN,DOWEL(Ø.187x.50)LEVER	120
-	REF	REF	REF	-	1-21030-6	PIN,DOWEL(Ø.187x1.25)HOUSING	119
-	REF	REF	REF	-	21045-3	RING,RET "C"(Ø.187)FD FING PIN	118
-	1	1	1	-	21024-5	WASHER, LOCK(#10)ADJ BLOCK	117
-	REF	REF	REF	-	21024-5	WASHER,LOCK(#10)ADJ PLATE	116
-	REF	REF	REF	-	21024-5	WASHER,LOCK(#10)FEED GDE ROD	115
							114
-	REF	REF	REF	-	5-21028-1	PIN,SLT SPR(Ø.125x.50)ADJ ROD	113
							112
-	4	4	4	-	21024-4	WASHER,LOCK(#8)STRIPPER	111
-	REF	REF	REF	-	21899-4	WASHER,FLAT(Ø 5/16)SCREW ADJ	110
							109
-	1	1	1	-	21018-5	NUT,HEX(NO.6)HOLDDOWN	108
-	REF	REF	REF	-	21068-5	NUT,HEX(6-32)FEED ADJ	107
							106
							105
-	1	1	-	-	992031-1	PIN, CLEVIS	104
-	1	1	1	-	21009-2	SCR,SKT SET(1/4-20x.25 LW)RAM	103
-	2	2	2	-	21017-2	SCR,DRIVE(#2x.19)ID PLATE	102
-	REF	REF	REF	-	6-23715-5	SCR,PAN HD(6-32x1.50)FEED ADJ	101
-	1	1	1	-	461264-1	PLATE, IDENTIFICATION	100
							99
-	1	1	1	-	22733-8	SCR,BHC(8-32x.38 LW)ANVIL	98
-	REF	REF	REF	-	2-21002-9	SCR,BHC(10-32x.75)CAP	97
-	REF	REF	REF	-	2-22733-8	SCR,BHC(1/4-20x.62)HOUSING	96
-	REF	REF	REF	-	2-21002-7	SCR,BHC(10-32x.50)SG ADJ BLOCK	95
-	4	4	4	-	2-21002-2	SCR,BHC(8-32x.50)TERM H DWN	94
-	2	2	2	-	2-21002-4	SCR,BHC(8-32x.75)R STP GDE	93
							92
-	1	1	1	-	1-21002-7	SCR,BHC(6-32x.38)CAM	91
							90
-	1	1	-	-	7-21000-9	SCR,SHC(4-40x.19)STRIPPER	89
							88
-	2	2	2	-	2-21000-8	SCR,SHC(8-32x.62)	87
-	1	1	1	-	2-22603-0	SCR,HEX HD(8-32x.31)FEED FINGER	86
							85
-	1	1	1	-	2-21000-7	SCR,SHC(8-32x.50)STRIPPER	84
-	REF	REF	REF	-	3-21000-7	SCR,SHC(10-32x.75)FEED ROD GD	83
-	REF	REF	REF	-	3-21000-6	SCR,SHC(10-32x.62)FD ADJ BLK	82
-	1	1	1	-	3-21000-4	SCR,SHC(10-32x.38)SG ADJ BL	81
-	REF	REF	REF	-	3-21000-4	SCR,SHC(10-32x.38)PIVOT BLK	80
-	-	REF	-	-	455749-1	GUARD, WINDOW	79
-	REF	-	-	-	679532-1	INSERT, GUARD	78
-	1	1	1	-	854769-1	DEPRESSOR, PIN	77
-	1	1	1	-	21028-2	PIN, SPRING	76
-	1	1	1	-	1-22278-0	SPRING, HOLD DOWN	75
							74
							73
-	REF	REF	REF	-	458109-1	WASHER, SPECIAL	72
-	REF	REF	REF	-	690517-1	SPACER	71
-77	-3	-2	-1	U/M	PART NO	DESCRIPTION	ITEM NO

QTY REQD PER ASSY — PARTS LIST

-	REF	REF	REF	-	22594-8	NUT,HEX(1/2-20)	70
-	REF	REF	REF	-	240628-1	PLATE, ADJUSTMENT	69
-	REF	REF	REF	-	240626-1	SHAFT, PIVOT	68
-	REF	REF	REF	-	240633-1	BUSHING	67
-	REF	REF	REF	-	455680-1	LEVER, INTERMEDIATE	66
-	REF	REF	REF	-	240629-1	BLOCK, PIVOT	65
-	REF	REF	REF	-	240632-2	SCREW, ADJ FEED ROD	64
-	REF	REF	REF	-	240659-3	PIN, CAM ROLLER	63
-	REF	REF	REF	-	240658-1	ROLLER, CAM	62
-	REF	REF	REF	-	454398-2	ROD, FEED	61
-	REF	REF	REF	-	454178-1	GUIDE, FEED ROD	60
-	REF	REF	REF	-	454220-1	CAP, RAM	59
-	REF	REF	REF	-	454485-1	HOUSING	58
							57
-	1	1	1	-	458537-2	PAWL, FEED	56
-	REF	REF	REF	-	240624-1	PIN, FEED FINGER	55
-	REF	REF	REF	-	691499-1	SPRING, FEED FINGER	54
-	REF	REF	REF	-	690541-1	HOLDER, FEED FINGER	53
-	REF	REF	REF	-	455679-2	LEVER, TERMINAL FEED ARM	52
-	1	1	1	-	811242-2	BUMPER, HOLDDOWN	51
-	1	1	1	-	690753-1	SPACER, TONKER	50
-	1	-	-	-	690602-6	CAM, PRE-FEED 1 5/8 ST	49
-	-	1	-	-	690602-5	CAM, PRE-FEED 1 1/8 ST	48
-	-	-	1	-	690501-4	CAM, POST-FEED 1 5/8 ST	47
-	1	1	1	-	459456-2	APPLICATOR, BASIC (SUBASSY)	46
-	1	1	1	-	690191-1	PLUG, NYLON	45
-	1	1	1	-	455673-1	RAM	44
							43
							42
-	1	1	1	-	7-21002-9	BOLT, CRIMPER(5/16x1.00)	41
							40
-	1	1	1	-	690125-1	SHIM SUBASSY	39
-	1	1	1	-	469367-1	SPACER, FINE ADJUST	38
-	1	1	1	-	879103-2	FINE ADJUST HEAD SUBASSY	37
							36
							35
-	1	1	1	-	690786-1	SUPPORT, TERMINAL	34
-	REF	REF	REF	-	455675-1	PLATE, BASE	33
							32
-	1	1	1	-	1320908-8	SPACER, STRIP GUIDE .580	31
-	REF	REF	REF	-	455689-1	BLOCK, STRIP GUIDE ADJ	30
-	1	1	1	-	1633091-1	STRIP GUIDE ASSEMBLY	29
-	1	1	1	-	455888-9	SPACER, FRONT SHEAR DEP	28
							27
							26
							25
-	1	1	1	-	1320928-3	GUIDE, STRIP (REAR)	24
							23
-	-	-	1	-	690472-2	STRIPPER	22
-	REF	REF	REF	-	4-22284-9	SPRING, FEED RETURN	21
-	1	1	-	-	679218-1	STRIPPER WIRE STOP ASSY	20
-	1	1	-	-	458949-1	STRIPPER	19
							18
							17
-	1	1	1	-	691667-1	GUARD, CHIP, FRONT	16
							15
							14
							13
-	1	1	1	-	5-22280-0	SPRING, SHEAR	12
-	1	1	1	-	690461-1	STOP, SHEAR	11
-	1	1	1	-	690459-1	HOLDER, SHEAR (FRONT)	10
-	1	1	1	-	462006-1	SHEAR, FLOAT (FRONT)	9
1	1	1	1	-	854014-1	ANVIL	8
-	1	1	1	-	5-240641-2	SPACER, DEPRESSOR (REAR)	7
							6
-	1	1	1	-	854772-1	DEPRESSOR, SHEAR (FRONT)	5
-	1	1	1	-	238011-9	SPACER, BLOCK CRIMPER	4
1	1	1	1	-	4-683453-7	CRIMPER, INSULATION	3
-	1	1	1	-	455888-1	SPACER, CRIMPER	2
1	1	1	1	-	1-456406-8	CRIMPER, WIRE	1
-77	-3	-2	-1	U/M	PART NO	DESCRIPTION	ITEM NO

QTY REQD PER ASSY — PARTS LIST

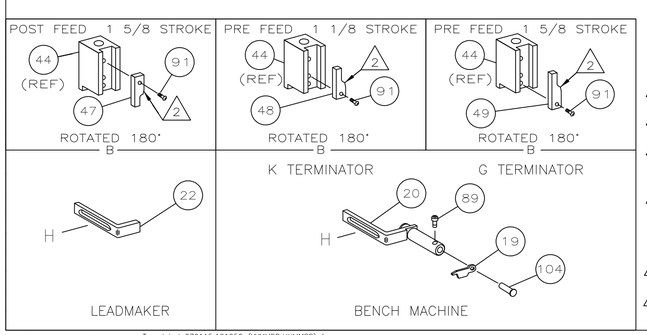

1. RECOMMENDED SPARE PARTS.
2. GREASE LIGHTLY.
3. GUARD MUST BE IN PLACE WHEN OPERATING APPLICATOR IN A BENCH MACHINE.
4. LUBRICATE DAILY USING NO. 20 MACHINE OIL.
5. ITEMS WITH QTY OF REF SPECIFIED (EXCEPT ITEMS 78 AND 79) ARE USED ON ITEM 46.
6. LUBRICATE REQUIRED WITH GOLD PLATED TERMINALS
7. ITEM 29 MUST BE ADJUSTED TO AQUIRE PROPER CUT-OFF TABS

* WARNING:

ON INSTALLATION, SET WIRE DISC TO LARGEST WIRE SIZE SETTING. USE OF SETTINGS BELOW MIN REQUIRED CRIMP HEIGHT SETTING WILL CAUSE DAMAGE TO CRIMP TOOLING.

THIS DRAWING IS A CONTROLLED DOCUMENT.

DIMENSIONS: INCHES

TOLERANCES UNLESS OTHERWISE SPECIFIED:
0 PLC ± -
1 PLC ± -
2 PLC ± -
3 PLC ± -
4 PLC ± -
ANGLES ± -

MATERIAL -
FINISH -

DWN 18JAN05 C.REICHELDERFER
CHK -
APVD 18JAN05 T.FLRIN
PRODUCT SPEC -
APPLICATION SPEC -
WEIGHT F

Tyco Electronics
Tyco Electronics Corporation
Harrisburg, PA 17105-3608

NAME SIDE FEED HDM APPLICATOR

SIZE A1 | CAGE CODE 00779 | DRAWING NO C-1385896 | RESTRICTED TO -

CUSTOMER DRAWING | SCALE - | SHEET 1 OF 1 | REV B1